Design | 2400 SERIES

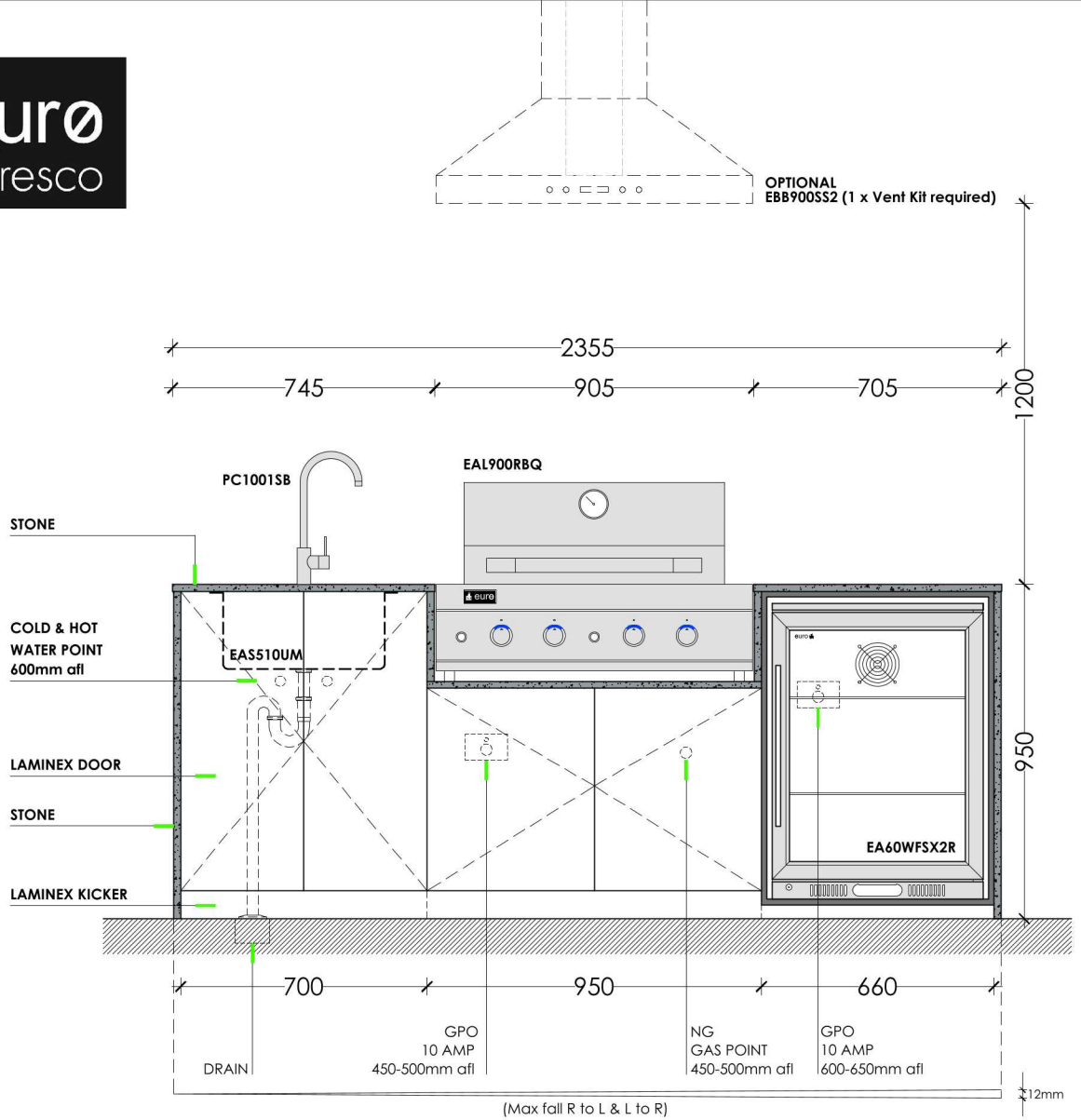

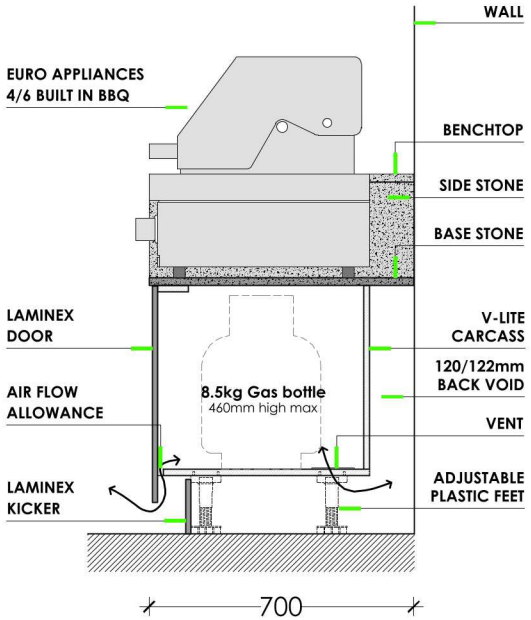

Notes :
The alfresco area must comply with your States - Gas Acts, Regulations and Standards to be able to install a Euro Alfresco kitchen.
Quoted for standard waterfall stone ends of 930mm high. It should be noted that a non-level surface will require a custom waterfall stone end to be cut, incurring an additional fee.
The service handout applies to a standard model kitchen. Services need to be changed according to your kitchen special layout. (ie. Reverse side sink& tap...etc.) Stone Depth +-700mm and Stone thickness +- 2mm.

DESIGN	OPTIONAL		APPLIANCES		CARCASS	DOORS	KICKERS	BOARD	STONE	COLOUR
2400 SERIES	EALNGCK	NG Kit	EAL900RBQ	LPG BBQ	HN7002D	AC7002DD	AC7002DK	N/R	745 S	STONE
	EALPGTP	LPG Kit	PC1001SB	Sink Mixer	HN9502DBQ	AC9502DBQD	AC9502DBQK		255 x 2	TBA
	EADC30CM	Domino Cover	EAS510UM	Sink	HN660DWF	N/R	AC660DWFK		950	DOOR
	ERB900SS2	ERB900SS2	EA60WFSX2R	Bev. Cooler					705	TBA
SIZE	ERB120SS3R	Canopy							930 x 2	KICKER
2355mm	VENT KIT									TBA