# Design | 3500 SERIES

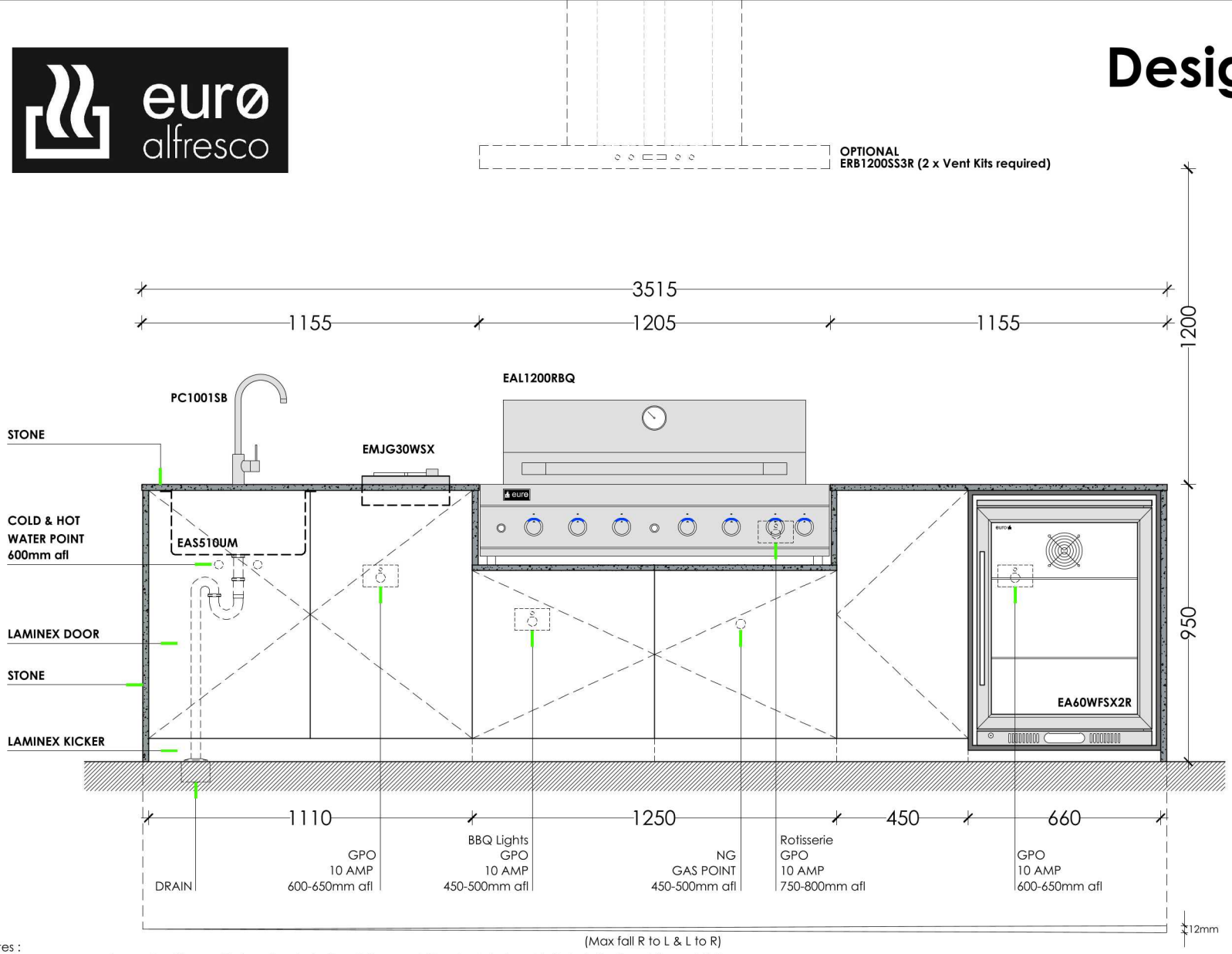


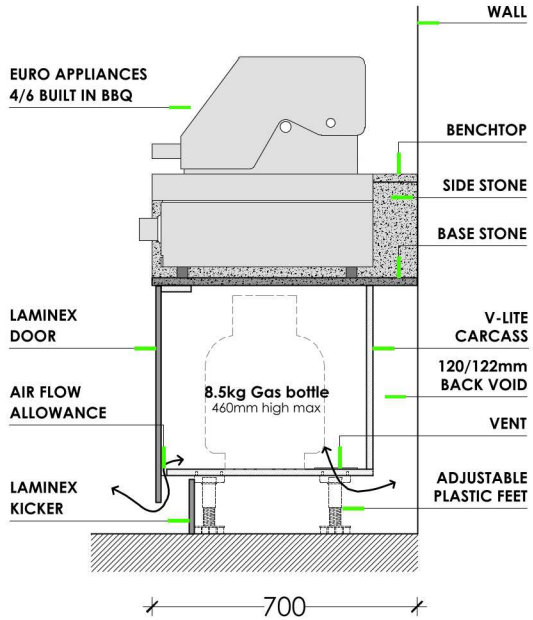


Notes :
The alfresco area must comply with your States - Gas Acts, Regulations and Standards to be able to install a Euro Alfresco kitchen.
Quoted for standard waterfall stone ends of 930mm high. It should be noted that a non-level surface will require a custom waterfall stone end to be cut, incurring an additional fee.
The service handout applies to a standard model kitchen. Services need to be changed according to your kitchen special layout. (ie. Reverse side sink& tap...etc.) Stone Depth +-700mm and Stone thickness +- 2mm.

| DESIGN | OPTIONAL | | APPLIANCES | | CARCASS | DOORS | KICKERS | BOARD | STONE | COLOUR |
|---|---|---|---|---|---|---|---|---|---|---|
| 3500 SERIES | EALNGCK | NG Kit | PC1001SB | Sink Mixer | HN11102D | AC11102DD | AC11102DK | N/R | 1155 SD | STONE |
| | EALPGTP | LPG Kit | EAS510UM | Sink | HN12502DBQ | AC12502DBQD | AC12502DBQK | | 255 x 2 | TBA |
| | EADC30CM | Domino Cover | EMJG30WSX | Wok Burner | HN4501D | AC4501DD | AC4501DK | | 625 X 2 | DOOR |
| | ERB120SS3R | Canopy | EAL1200RBQ | LPG BBQ | HN660DWF | N/R | AC660DWFK | | 1155 | TBA |
| SIZE | VENT KIT | | EA60WFSX2R | Bev. Cooler | | | | | 930 x 2 | KICKER |
| 3515mm | | | | | | | | | | TBA |